VISION SWING HANDLE STANDARD FOR BESTLOCK CYLINDER

Low profile swing handle for Best cylinder and control mechanism. Available in turn-to-latch version where the door is locked by turning the key.

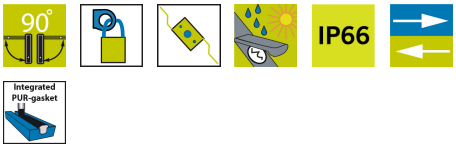

MATERIAL
Dish: Zinc die cast, black coated or fibre glass reinforced polyamide (PA6GF30)
Handle: Zinc die cast, black coated or fibre glass reinforced polyamide (PA6GF30)
Padlock loop: Stainless steel 304
Pivot shaft: Zinc die cast, zinc plated

RELATED PRODUCTS
Rod latch systems: 1-008.04, 1-008.21, 1-008.25, 1-008.07
Similar products: 1-002.18
Use the Index Code at industrilas.com

TECHNICAL INFORMATION
Cutout: Version C
Without dust cover: Handle height = 23 mm (X)
With dust cover: Handle height = 28 mm (X)

Standards: IP66, NEMA 4

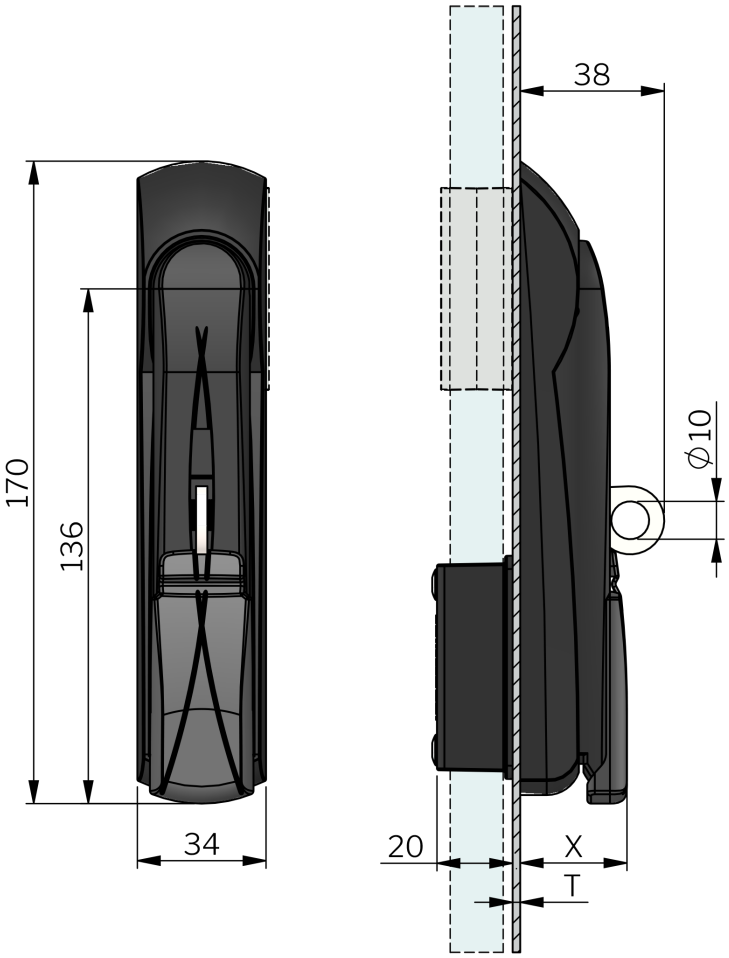

Industrilås
When access counts

Make your selections in each column to create your article number (AAAAAAABC-DDDD)

AAAAAAA	Material	B	Door thickness T	C	PDL	DDDD	Dust cover
1216118	Handle zinc / dish PA6	1	0,8 - 1,5 mm	1	Yes	C70U	No
1216418	Handle zinc / dish zinc	2	1,6 - 2,5 mm			C70D	Yes
		3	2,6 - 3,5 mm				

PDL = Spring loaded padlock loop retracts when handle is released.
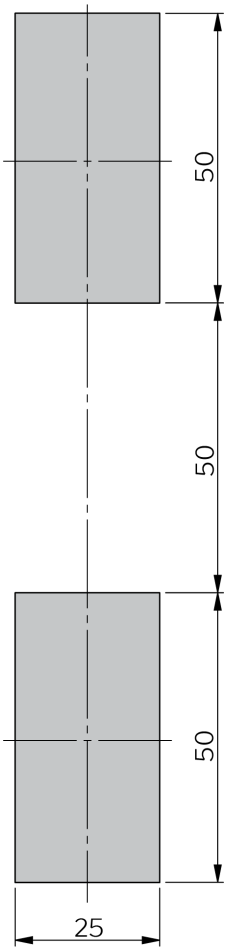
Version C